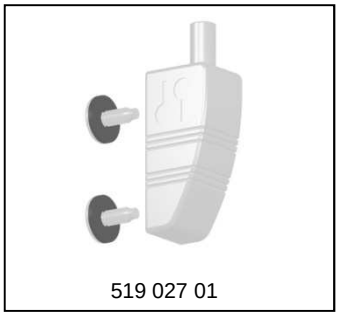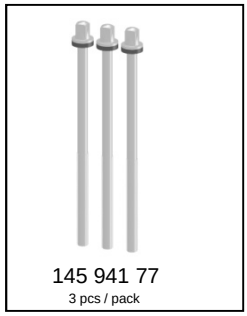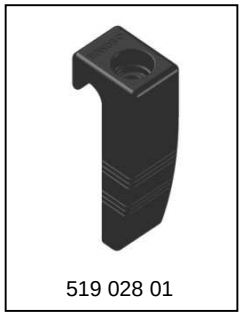MC 2410 Bass Drum